INSTALLATION INSTRUCTIONS
3/4" STOP VALVE / VOLUME CONTROL
Model No. 1-607U

NEWPORT BRASS®
Flawless Beauty. From Faucet to Finish.™

Recommended Installation by a Professional Plumbing Contractor

Note: Use plumbers tape or equivalent to seal all threaded port joints.
Warning: To prevent severe damage to valve, any solder/braze process must be performed a min. of 4" from ports.
These valves may be used as stop & volume controlling valves between water source and end output device. Typical usage is between thermo valve and multiple output devices (eg. Showerhead, body sprays, handshowers, etc…).

Installing valve:

1. Attach supply source to inlet of valve. Water flow direction is indicated by "ARROW" on side of body.
2. Attach end device to outlet of valve.
3. Position valve in wall as shown below. These dimensions are for typical installations. If thick finished wall materials are to be used in construction, it is recommended that valve is position toward outer face of stud.
4. Support valve and/or piping to stud framing using strap tape or equivalent.
5. Turn on water supply and inspect for leaks.

Installing Trim (after wall is finished):

1. Place escutcheon/bonnet trim on valve.
2. Mark the all-thread were excess needs to be trimmed.
3. Remove escutcheon/bonnet trim and cut all thread nipple 1/16" less than indicated mark (prevents exposure of thread ends).
4. Cut cartridge stem as per Trims installation.
5. Reinstall escutcheon/bonnet trim and handle.
6. Secure handle into place as mentioned in Trims installation.

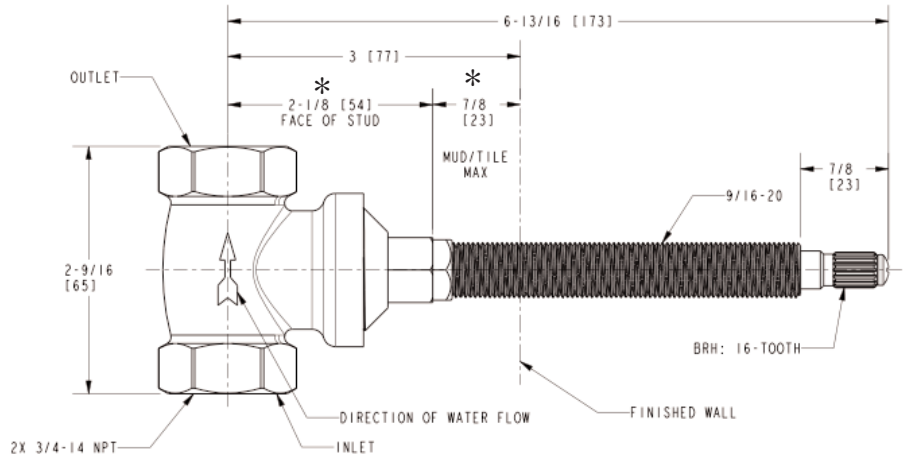

* If finished wall material is thicker than "Mud/ Tile max"stated, then the "Face of stud" dimension must be less than shown.

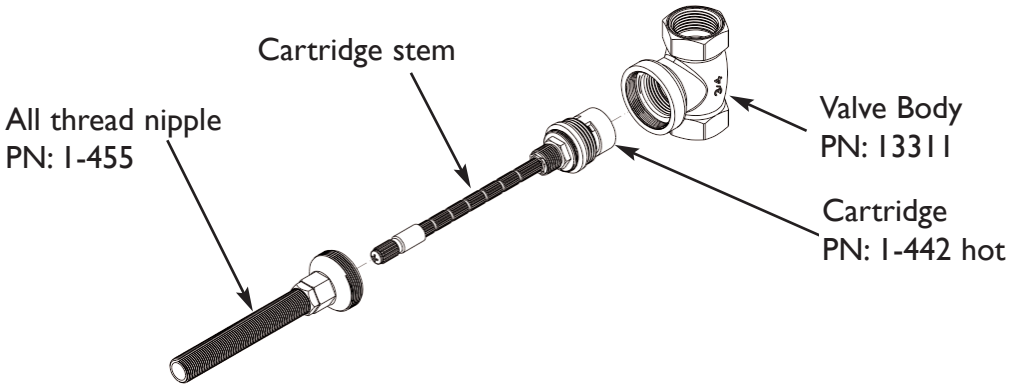

2001 CARNEGIE AVE, SANTA ANA CA 92705
(949) 417-5207
WWW.NEWPORTBRASS.COM