hansgrohe

Talis C
Pot Filler, Wall-Mounted
Finishes : **polished nickel** Part no. : **04218830**

Description

Features

- Swivel range 180°
- Aerated spray
- Wall-mounted
- Flow: 2.5 GPM (9.5 L/Min)
- 90° ceramic valves
- ½" NPT
- California Low Lead / Section 116875 CHSC

Item details

List Price	$ 1,115.00

Compliance

UPC C ®

Product image
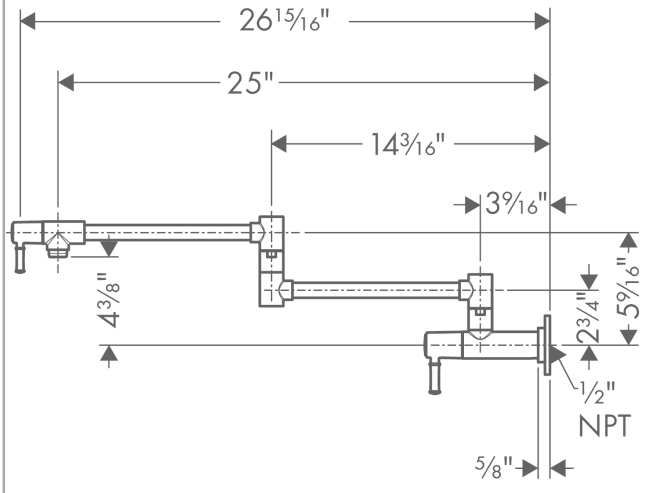
Scale drawing