California Faucets®

Steampunk Bay™

WALL MOUNT TUB FILLER WITH HANDSHOWER

8608W-ETW.20
8608W-ETW.18
8608B-ETW.20
8608B-ETW.18
8608-ETW.20
8608-ETW.18

Features

- *Tub filler Maximum flow rate: 15 gpm (58.6 L/min) at 60 psi*
- *Handshower flow rate: 2.0 gpm (7.6L/min) or 1.8 gpm (6.8 L/min)*
- *1/4 turn ceramic disc cartridges*
- *All brass construction*
- *Over 28 finishes including 13 PVD finishes*

Codes/Standards Applicable

Product meets or exceeds the following:

- *ASME A112.18.1/CSA B125.1*
- *CEC (1.8 gpm) / DOE (2.0 & 1.8 gpm)*
- *Commonwealth of MA*
- *ADA compliant (with lever handles)*
- *Local codes may require installation of an upstream tempering valve*

8608B-ETW.18 SHOWN

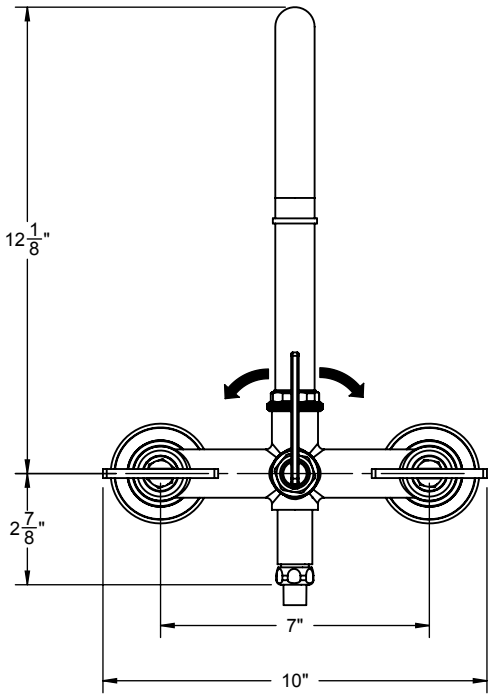

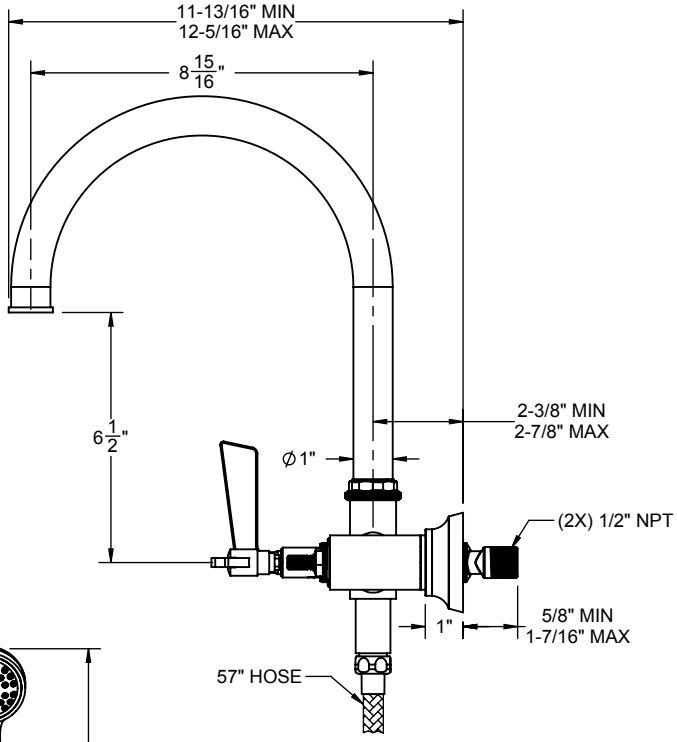

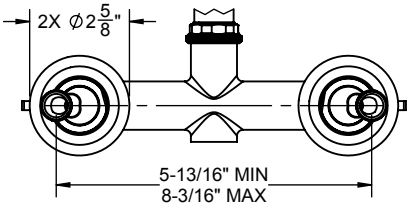

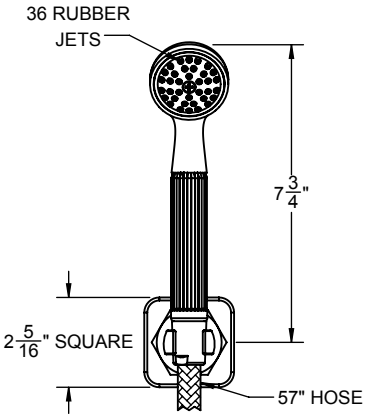

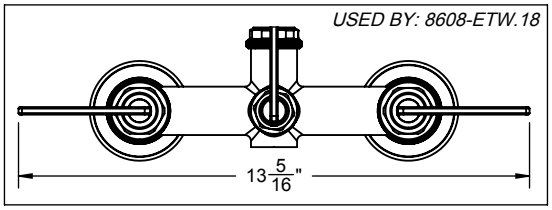

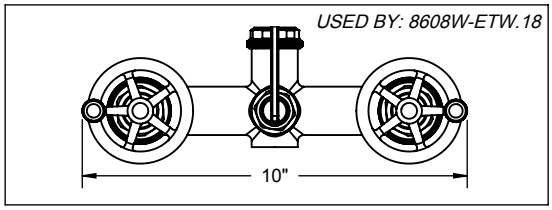

(1X) PLASTIC #8-10 FINNED ANCHOR

(1X) #10 X 2 STAINLESS STEEL SCREW

THROUGH-HOLE SPECIFICATIONS

MIN	RECOMMENDED	MAX
Ø1-13/16"	Ø1-7/8"	Ø2"

SPECIFICATIONS SUBJECT TO CHANGE WITHOUT NOTICE

ALL DIMENSIONS SHOWN TO NEAREST 1/16"