BT0304.01 SPECIFICATIONS

coco·1 blu·stone™ freestanding bathtub

FEATURES:
- Freestanding, blu·stone™ bathtub
- Streamlined, high profile one piece design
- 67" (1700mm) L x 31½" (800mm) W x 21¾" (550mm) H
- Includes integral slot overflow & matching blu·stone™ waste cover
- Made of blu·stone™ providing the look and feel of natural stone
- Stronger and more durable than acrylic
- Non-porous, stain resistant surface that does not require sealing
- Does not promote bacteria, mold or fungi
- Tailpiece not included (Blu recommends BTWaste.RN or BTWasteCI.RN)

SPECIFICATIONS:

Basin Area:	54½" (1385mm) x 23¾" (606mm)*
Top Area:	65" (1650mm) x 29½" (750mm)*
To Overflow:	2¼" (60mm)*
Slope of Backrest:	77°*
Water Depth:	15¼" (390mm)*
Capacity:	91.0G (345L)*
Weight:	220lbs (avg. 100kg)*
Hot water supply req'd:	Should be 70% of water capacity of tub or greater
Warranty:	Five Year Warranty (Residential use) One Year Warranty (Commercial use)
Material:	blu·stone™
Shipping Weight:	331lbs (avg. 150kg)*
Shipping Dimensions	(LWH) 73¾" x 38" x 32¼" (1875mm x 965mm x 820mm)*

COLORS/FINISHES:
White Matte or Gloss as standard
Custom colors available (Tier 1)

ACCESSORIES (sold separately):
- BTWaste.RN or BTWasteCI.RN Island tub drain for easy installation

INSTALLATION NOTES:
Install this product according to the installation guide. Floor support under bath must provide for a minimum of 1400 lbs (635kg). Installation will vary. Our products must be installed by certified professionals only and according to our installation guide as well as federal, provincial / state and local building codes and regulations

CODES / STANDARDS APPLICABLE:
- Meets or exceeds ANSI / ASME standard CSA B45.5.11 / IAPMO Z124
- IAPMO / ANSI Z124.8
- CSA

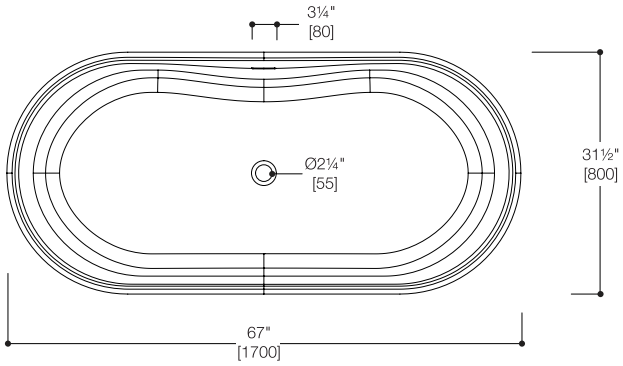

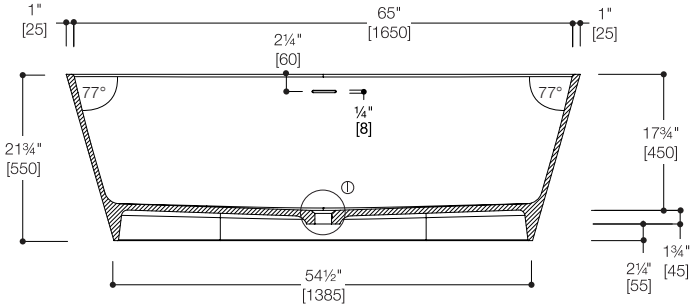

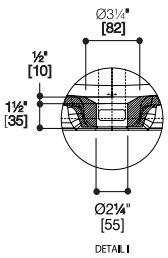

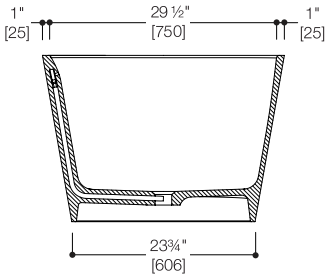

*Approximate measurements for comparison only.
Note: These dimensions and specifications are subject to change without notice.

blu BATHWORKS®

2017-08

1 866 907 0122 blubathworks.com